☑RoHS ☑HF ☑REACH

正视图

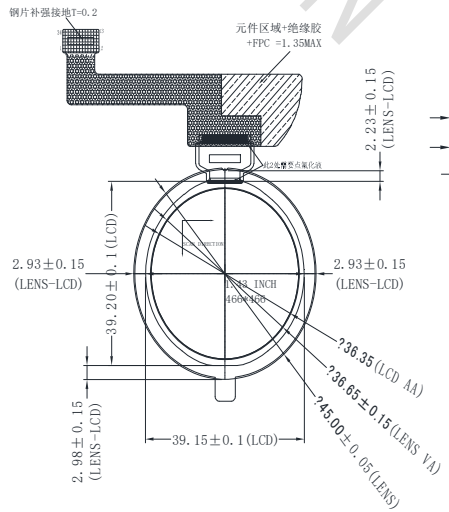

侧视图

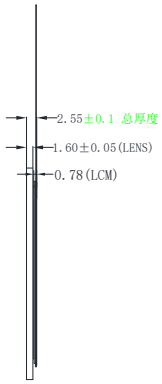

背视图

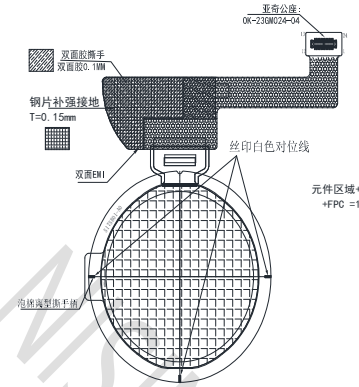

背视弯折图

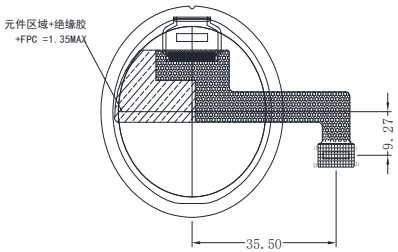

FPC弯折出货

MIPI定义

Pin Assignment	
NO.	SYMBOL
1	GND
2	NC
3	NC
4	NC
5	GND
6	MDSI_DP0
7	MDSI_DN0
8	GND
9	MDSI_CP
10	MDSI_CN
11	GND
12	RESET（1.8V）
13	LCD_TE（1.8V）
14	GND
15	IOVDD 1.8V
16	VCI_EN_1.8V
17	MTP
18	NC
19	VBAT
20	VBAT
21	GND
22	NC
23	NC
24	GND

1、CG材质&表面硬度:旭虹玻璃 1.6mm,平面效果，& 硬度≥7H;
2.达因值：≥32 dyn/cm（CG油墨面、Film非ITO面）
3.强化条件:CS≥700Mpa，DOL≥35 μm
4.钢球冲击能量:;64G钢球，40CM高度（0.2J）冲击中心点三次，需满足不破碎
5.油墨附着力&翘曲度&油墨厚度：<0.2mm； BLACK INK图层为黑色印刷;
7.工作温度:-10度到+60度；存储温度:-20度到+70度
8.未注倒边：C=0.15*0.15;
9,.符合ROHS标准;
10.未注公差+/-0.1mm
11;所有内角为直角位置均导为≥R0.3MM的圆角
12.表面电镀AF，水滴角：110°

OLED Note:
1. Display mode: 1.43" AMOLED 466*RGB*466; Viewing direction: FREE;
2. Interface Type: QSPI Interface; Input voltage: ;
3. OLED Driver IC: CO5300AF-08; Power IC: BV6810 ;TP-IC: NC;
4. Luminance: 720cd/m2(MIN), 800cd/m2(TYP),880cd/m2(MAX);
5. Chromaticity White(X,Y): x=0.29±0.02; y= 0.31±0.02;
6. NTSC: 100%(TYP); Contrast:10000(MIN); Uniformity: 80% MIN;
7. Operating temprature: -20°C ~ +70°C ;
8. Storage temprature: -30°C ~ +80°C ;
9. Interface connector:
10. "( )" Reference dimension; " * " Control dimensions; 翘曲度: ≤0.3mm;
11. Unmarked dimensional tolerance: ±0.20
12. If the customer does full lamination, considering the material tolerance and fitting tolerance, it is recommended that the CTP window be expanded by 0.2mm from one side of LCD AA area.

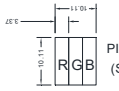

PIXEL DETAIL
(SCALE:100:1)

REVISION RECORD		DATE	NISIN SHENZHEN NISIN OPTOELECTRONICS CO., LTD				
1							
2			DRAW TYPE. : ASSY-Outline		NS143DW2401AZ01		
3					Ver. : V00		SCALE : N.T.S.
4			DRAWN	RCY	DATE	20240927	UNIT : mm
5			CHECKED		DATE		PRO.(3):
6			APPROVED		DATE		SHEET : 1/1

RoHS